Summary in Graph

Exam Summary (GO Classes CS | Digital Logic | Combinational Circuits | Weekly Quiz 6)

Qs. Attempted:	0 (0 + 0)	Correct Marks:	0 (0 + 0)
Correct Attempts:	0 (0 + 0)	Penalty Marks:	0 (0 + 0)
Incorrect Attempts:	0 (0 + 0)	Resultant Marks:	0 (0 + 0)

Total Questions:	15 (5 + 10)
Total Marks:	25 (5 + 20)
Exam Duration:	45 Minutes
Time Taken:	0 Minutes

Individual Question Statistics

Select Metric: Marks Obtained

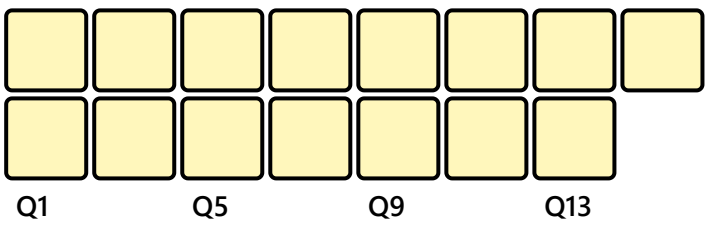

* Average Stats based on first-attempt stats of Top 10% (21) out of 212 users

EXAM RESPONSE EXAM STATS FEEDBACK

Technical

Q #1 Multiple Select Type Award: 1 Penalty: 0 Digital Logic

Consider the following circuit using two 2×1 multiplexers:

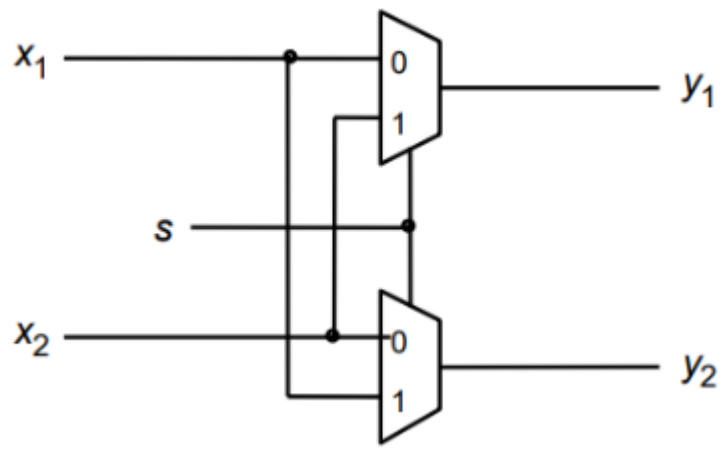

Which of the following is the correct behavior of this circuit?

A. When $s = 0$ then $y_1 = x_1, y_2 = x_2$
B. When $s = 0$ then $y_1 = x_2, y_2 = x_1$
C. When $s = 1$ then $y_1 = x_1, y_2 = x_2$
D. When $s = 1$ then $y_1 = x_2, y_2 = x_1$

Your Answer: | Correct Answer: A;D | Not Attempted | Time taken: 00min 00sec | Discuss

Q #2 Multiple Choice Type | Award: 1 | Penalty: 0.33 | Digital Logic

Consider the following boolean equations:

A. $bd + acd' + abc = bd + acd'$
B. $(b + d)(a + c + d')(a + b + c) = (b + d)(a + c + d')$

Which of the above is correct?

A. A Only
B. B Only
C. Both
D. None

Your Answer: | Correct Answer: C | Not Attempted | Time taken: 00min 00sec | Discuss

Q #3 Multiple Choice Type | Award: 1 | Penalty: 0.33 | Digital Logic

A demultiplexer can be implemented using a decoder circuit.
For example, the 2-to-4 decoder can be used as a 1-to-4 demultiplexer. Which input of decoder serves as the data input for the demultiplexer?

En	w_1	w_0	y_0	y_1	y_2	y_3
1	0	0	1	0	0	0
1	0	1	0	1	0	0
1	1	0	0	0	1	0
1	1	1	0	0	0	1
0	$\times$	$\times$	0	0	0	0

(a) Truth Table of Decoder

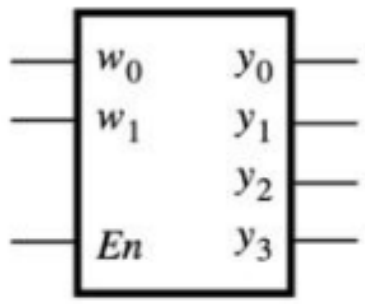

(b) Graphical symbol

A. w_0
B. E_n
C. w_1
D. We can not implement a demultiplexer using a decoder.

Your Answer: | Correct Answer: B | Not Attempted | Time taken: 00min 00sec | Discuss

Q #4 | Multiple Choice Type | Award: 1 | Penalty: 0.33 | Digital Logic

A decoder may be described as

A. Multiple-input single-output logic circuit which converts coded inputs into a coded output where the input and output codes are different.
B. Single-input single-output logic circuit which converts the coded input into a coded output where the input and output codes are different.
C. Multiple-input multiple-output logic circuit which converts coded inputs into coded outputs where the input and output codes are different.
D. Single-input multiple-output logic circuit which converts the coded input into coded outputs where the input and output codes are different.

Your Answer: | Correct Answer: C | Not Attempted | Time taken: 00min 01sec | Discuss

Q #5 | Multiple Choice Type | Award: 1 | Penalty: 0.33 | Digital Logic

Consider the 4-to-2 Encoder given below. Note: This is NOT a Priority Encoder.

For the input $\mathrm{A}_3\ \mathrm{A}_2\ \mathrm{A}_1\ \mathrm{A}_0 = 0110$ what is the value of the output $\mathrm{Y}_1\mathrm{Y}_0$?

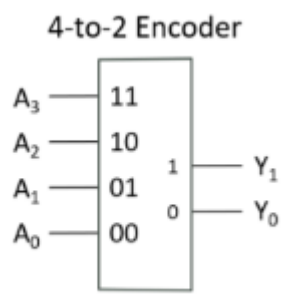

A. 00
B. 10
C. 11
D. Cannot be determined.

Your Answer: | Correct Answer: D | Not Attempted | Time taken: 00min 00sec | Discuss

Q #6 Multiple Choice Type | Award: 2 | Penalty: 0.67 | Digital Logic

What is the following circuit?

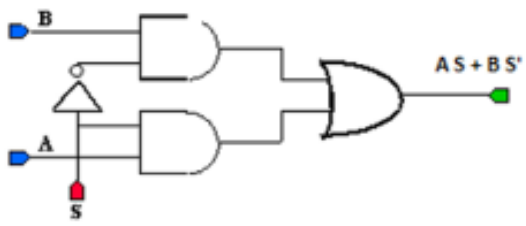

A. $2-1$ MUX
B. $1-2$ Decoder
B. $2-1$ Priority Encoder
C. $1-2$ DEMUX

Your Answer: | Correct Answer: A | Not Attempted | Time taken: 00min 00sec | Discuss

Q #7 Multiple Select Type | Award: 2 | Penalty: 0 | Digital Logic

Consider the following function:

$$f(a,b,c)=\sum m(1,3,4,7)+\sum d(6).$$

Note that "m" represents the minterms for which $f(a,b,c)$ is 1. " d " represents the "don't care" minterms. Which of the following is / are correct for f?

A. Number of Prime Implicants is 4.
B. Number of Essential Prime Implicants is 3.
C. Number of minimum sum of product expressions is 2.
D. Number of minimum product of sum expressions is 2.

Your Answer: | Correct Answer: A;C | Not Attempted | Time taken: 00min 00sec | Discuss

Q #8 Multiple Select Type | Award: 2 | Penalty: 0 | Digital Logic

The following circuit using a 3-to-8 binary decoder and an OR gate is an implementation of the function:

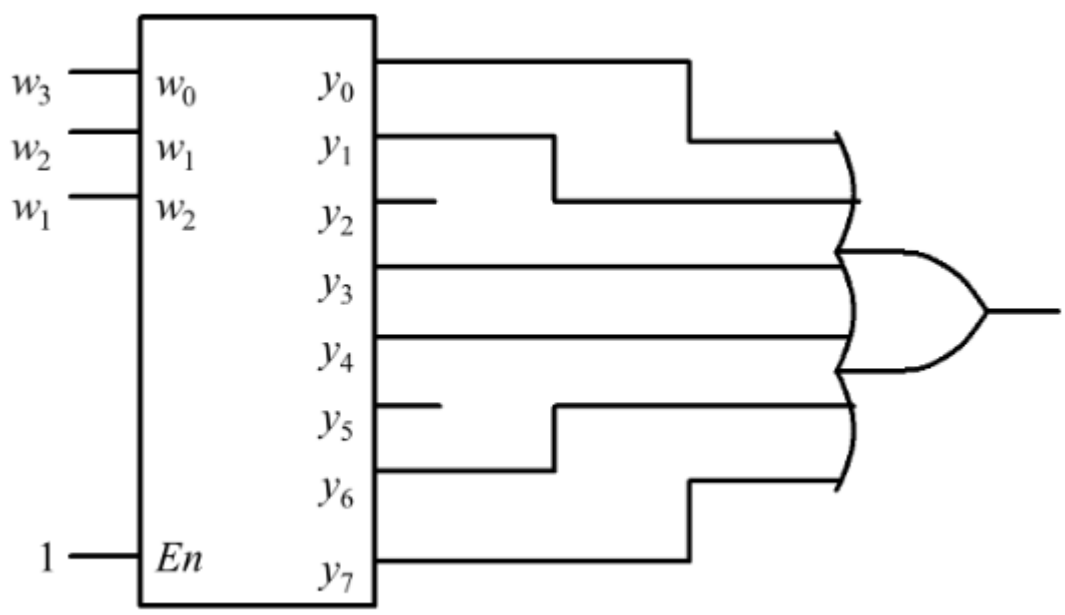

A. $f(w_1,w_2,w_3)=\sum_m(0,1,3,4,6,7)$
B. $f(w_1,w_2,w_3)=\sum_m(1,2,4,5,7,8)$

C. $f(w_1, w_2, w_3) = \prod_{M}(0, 1, 3, 4, 6, 7)$

D. $f(w_1, w_2, w_3) = \sum_{m}(2, 5)$

Your Answer: | Correct Answer: A | Not Attempted | Time taken: 00min 00sec | Discuss

Q #9 Multiple Select Type | Award: 2 | Penalty: 0 | Digital Logic

Consider the following function:

$$f(a, b, c, d) = \sum m(0, 1, 6, 9, 11, 15) + \sum d(2, 5, 8, 10, 14).$$

Which of the following is/are Not a Essential Prime Implicant of f?

A. ac
B. ab'
C. $b'd'$
D. $a'c'd$

Your Answer: | Correct Answer: B;C;D | Not Attempted | Time taken: 00min 00sec | Discuss

Q #10 Multiple Select Type | Award: 2 | Penalty: 0 | Digital Logic

For any Boolean function, a Non-Essential Prime Implicant is a Prime implicant that has no element that cannot be covered by other prime implicants.

Which of the following expressions is obtained from a non-essential prime implicant for the given $\mathrm{K\text{-}map}$?

cd \ ab	00	01	11	10
00	1		1	1
01		1	1	
11			1	1
10	1		1	1

A. $bc'd$
B. $d'b'$
C. ad'
D. abc

Your Answer: | Correct Answer: C | Not Attempted | Time taken: 00min 00sec | Discuss

Q #11 Multiple Select Type | Award: 2 | Penalty: 0 | Digital Logic

The circuit below uses two 2-to-4 decoders, and inverter, and an OR gate to implement a function $\mathrm{F(X, Y, Z)}$. X is the most significant bit.

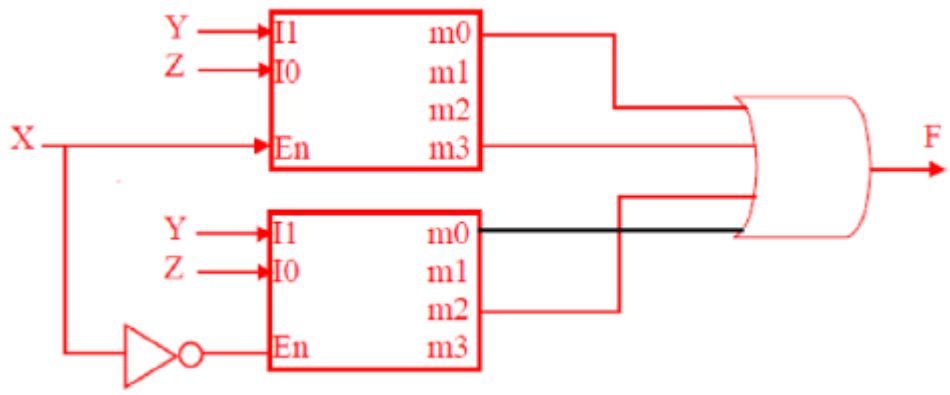

$F(X, Y, Z)$ can be expressed as (Encircle all that applies):

A. $\sum m(0, 3, 4, 6)$
B. $\sum m(0, 2, 4, 7)$
C. $\prod M(1, 3, 5, 6)$
D. $\prod M(1, 2, 5, 7)$

Your Answer: | Correct Answer: B;C | Not Attempted | Time taken: 00min 00sec | Discuss

Q #12 Multiple Choice Type | Award: 2 | Penalty: 0.67 | Digital Logic

Consider the following circuit containing a 2-to-4 decoder:

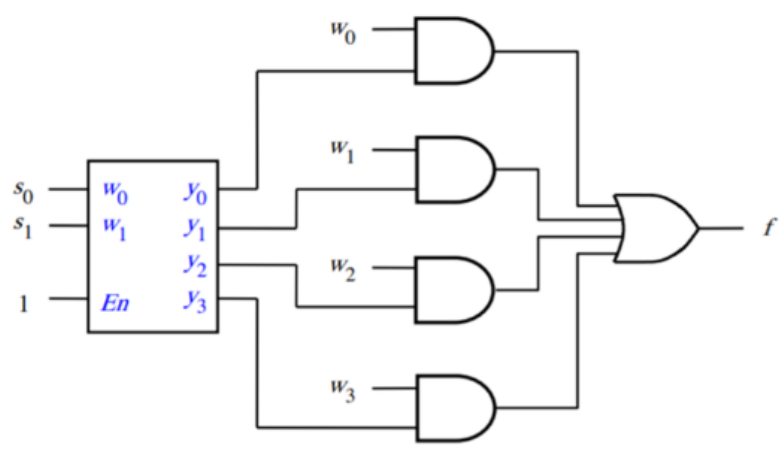

The following circuit behaves like:

A. 2-to-4 Decoder
B. 2-to-4 Multiplexer
C. 4-to-1 De-multiplexer
D. 4-to-1 Multiplexer

Your Answer: | Correct Answer: D | Not Attempted | Time taken: 00min 00sec | Discuss

Q #13 Numerical Type | Award: 2 | Penalty: 0 | Digital Logic

A majority voting machine inputs three binary bits (x_2, x_1, x_0), and outputs $y = 1$ when the majority of the input bits are 1. Otherwise, the output is $y = 0$. Number of Prime implicants of Y which are Not Essential Prime Implicants?

Your Answer: | Correct Answer: 0 | Not Attempted | Time taken: 00min 00sec | Discuss

Q #14 Numerical Type | Award: 2 | Penalty: 0 | Digital Logic

A bit counting machine reads a binary input vector (a, b, c, d) and produces a binary number $(\mathrm{S}_2, \mathrm{S}_1, \mathrm{S}_0)$ that counts the number of $1'\mathrm{s}$ in the input bits. For example when $(a, b, c, d) = (0, 1, 1, 1)$, we have output $(\mathrm{S}_2, \mathrm{S}_1, \mathrm{S}_0) = (0, 1, 1)$, and when $(a, b, c, d) = (1, 0, 1, 0)$, we have output $(\mathrm{S}_2, \mathrm{S}_1, \mathrm{S}_0) = (0, 1, 0)$. Number of Prime Implicants of S_2?

Your Answer: | Correct Answer: 1 | Not Attempted | Time taken: 00min 00sec | Discuss

Q #15 | Numerical Type | Award: 2 | Penalty: 0 | Digital Logic

A bit counting machine reads a binary input vector (a, b, c, d) and produces a binary number $(\mathrm{S}_2, \mathrm{S}_1, \mathrm{S}_0)$ that counts the number of $1'\mathrm{s}$ in the input bits. For example when $(a, b, c, d) = (0, 1, 1, 1)$, we have output $(\mathrm{S}_2, \mathrm{S}_1, \mathrm{S}_0) = (0, 1, 1)$, and when $(a, b, c, d) = (1, 0, 1, 0)$, we have output $(\mathrm{S}_2, \mathrm{S}_1, \mathrm{S}_0) = (0, 1, 0)$. Let $\mathrm{Y}(\mathrm{a}, \mathrm{b}, \mathrm{c}, \mathrm{d})$ be a boolean function such that Y is 1 for any input combination (a, b, c, d) if and only if both S_1, S_0 are both 1 for that input combination. The number of Prime Implicants in Y?

Your Answer: | Correct Answer: 4 | Not Attempted | Time taken: 00min 00sec | Discuss

Copyright & Stuff